TEXAS INSTRUMENTS
Data sheet acquired from Harris Semiconductor
SCHS093C − Revised October 2003

CD14538B Types

CMOS Dual Precision Monostable Multivibrator

High-Voltage Types (20-Volt Rating)

Features:
- *Retriggerable/resettable capability*
- *Trigger and reset propagation delays independent of R_x, C_x*
- *Triggering from leading or trailing edge*
- *Q and $\overline{Q}$ buffered outputs available*
- *Separate resets*
- *Replaces CD4538B Type*

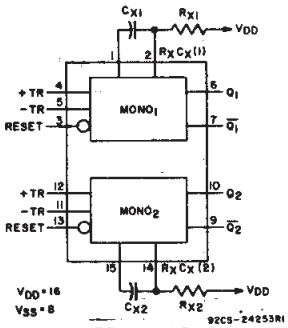

CD14538B
FUNCTIONAL DIAGRAM

■ CD14538B dual precision monostable multivibrator provides stable retriggerable/resettable one-shot operation for any fixed-voltage timing application.

An external resistor (R_X) and an external capacitor (C_X) control the timing and accuracy for the circuit. Adjustment of R_X and C_X provides a wide range of output pulse widths from the Q and $\overline{Q}$ terminals. The time delay from trigger input to output transition (trigger propagation delay) and the time delay from reset input to output transition (reset propagation delay) are independent of R_X and C_X. Precision control of output pulse widths is achieved through linear CMOS techniques.

Leading-edge-triggering (+TR) and trailing-edge-triggering (−TR) inputs are provided for triggering from either edge of an input pulse. An unused +TR input should be tied to V_{SS}. An unused −TR input should be tied to V_{DD}. A RESET (on low level) is provided for immediate termination of the output pulse or to prevent output pulses when power is turned on. An unused RESET input should be tied to V_{DD}. However, if an entire section of the CD14538B is not used, its inputs must be tied to either V_{DD} or V_{SS}. See Table I.

In normal operation the circuit retriggers (extends the output pulse one period) on the application of each new trigger pulse. For operation in the non-retriggerable mode, $\overline{Q}$ is connected to −TR when leading-edge triggering (+TR) is used or Q is connected to +TR when trailing-edge triggering (−TR) is used. The time period (T) for this multivibrator can be calculated by: $T = R_XC_X$.

The minimum value of external resistance, R_X, is 4 KΩ. The minimum and maximum values of external capacitance, C_X, are 0 pF and 100 μF, respectively.

The CD14538B is interchangeable with type MC14538 and is similar to and pin-compatible with the CD4098B* and CD4538B. It can replace the CD4538B which type is not recommended for new designs.

The CD14538B types are supplied in 16-lead hermetic dual-in-line ceramic packages (F3A suffix), 16-lead dual-in-line plastic packages (E suffix), 16-lead small-outline packages (M, M96, MT, and NSR suffixes), and 16-lead thin shrink small-outline packages (PW and PWR suffixes).

*T = 0.5 R_XC_X for $C_X \geq 1000$ pF #T = R_XC_X; $C_X$min = 5000 pF

- *Wide range of output-pulse widths*
- *Schmitt-trigger input allows unlimited rise and fall times on +TR and −TR inputs*
- *100% tested for maximum quiescent current at 20 V*
- *Maximum input current of 1 μA at 18 V over full package-temperature range; 100 nA at 18 V and 25° C*
- *Noise margin (full package-temperature range):*
  - *1 V at $V_{DD} = 5$ V*
  - *2 V at $V_{DD} = 10$ V*
  - *2.5 V at $V_{DD} = 15$ V*
- *5-V, 10-V, and 15-V parametric ratings*
- *Standardized, symmetrical output characteristics*
- *Meets all requirements of JEDEC Tentative Standard No. 13B, "Standard Specifications for Description of 'B' Series CMOS Devices."*

Applications:
- *Pulse delay and timing*
- *Pulse shaping*

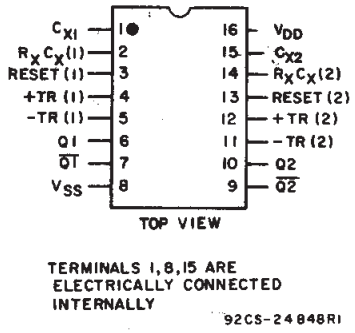

Terminal Assignment

Copyright © 2003, Texas Instruments Incorporated

MAXIMUM RATINGS, *Absolute-Maximum Values:*

DC SUPPLY-VOLTAGE RANGE, (V_{DD})
Voltages referenced to V_{SS} Terminal) ..... -0.5V to +20V
INPUT VOLTAGE RANGE, ALL INPUTS ..... -0.5V to V_{DD} +0.5V
DC INPUT CURRENT, ANY ONE INPUT ..... ±10mA
POWER DISSIPATION PER PACKAGE (P_D):
For T_A = -55°C to +100°C 500mW
For T_A = +100°C to +125°C ..... Derate Linearity at 12mW/°C to 200mW
DEVICE DISSIPATION PER OUTPUT TRANSISTOR
FOR T_A = FULL PACKAGE-TEMPERATURE RANGE (All Package Types) 100mW
OPERATING-TEMPERATURE RANGE (T_A) ..... -55°C to +125°C
STORAGE TEMPERATURE RANGE (T_{stg}) ..... -65°C to +150°C
LEAD TEMPERATURE (DURING SOLDERING):
At distance 1/16 ± 1/32 inch (1.59 ± 0.79mm) from case for 10s max ..... +265°C

RECOMMENDED OPERATING CONDITIONS
For maximum reliability, nominal operating conditions should be selected so that operating is always within the following ranges:

CHARACTERISTIC		V_{DD} (V)	LIMITS Min.	LIMITS Max.	UNITS
Supply-Voltage Range (For T_A=Full Package-Temperature Range)		—	3	18	V
Input Pulse Width +TR, -TR, or RESET	t_{WH}, t_{WL}	5	140	—	ns
		10	80	—	
		15	60	—	

TABLE I
CD4538B FUNCTIONAL TERMINAL CONNECTIONS

FUNCTIION	V_{DD} TO TERM. NO.		V_{SS} TO TERM. NO.		INPUT PULSE TO TERM. NO.		OTHER CONNECTIONS	
	$MONO_1$	$MONO_2$	$MONO_1$	$MONO_2$	$MONO_1$	$MONO_2$	$MONO_1$	$MONO_2$
Leading-Edge Trigger/ Retriggerable	3, 5	11, 13			4	12		
Leading-Edge Trigger/ Non-Retriggerable	3	13			4	12	5-7	11-9
Trailing-Edge Trigger/ Retriggerable	3	13	4	12	5	11		
Trailing-Edge Trigger/ Non-Retriggerable	3	13			5	11	4-6	12-10

NOTES:
1. A RETRIGGERABLE ONE-SHOT MULTIVIBRATOR HAS AN OUTPUT PULSE WIDTH WHICH IS EXTENDED ONE FULL TIME PERIOD (T) AFTER APPLICATION OF THE LAST TRIGGER PULSE.
2. A NON—RETRIGGERABLE ONE-SHOT MULTIVIBRATOR HAS A TIME PERIOD (T) REFERENCED FROM THE APPLICATION OF THE FIRST TRIGGER PULSE.

INPUT PULSE TRAIN

RETRIGGERABLE MODE PULSE WIDTH (+TR MODE)

NON-RETRIGGERABLE MODE PULSE WIDTH (+TR MODE)

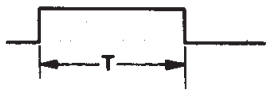

STATIC ELECTRICAL CHARACTERISTICS

CHARACTERISTIC	CONDITIONS			LIMITS AT INDICATED TEMPERATURES (°C)							UNITS
	V_O (V)	V_{IN} (V)	V_{DD} (V)	-55	-40	+85	+125	Min.	+25 Typ.	Max.	
Quiescent Device Current, I_{DD} Max.	—	0,5	5	5	5	150	150	—	0.04	5	μA
	—	0,10	10	10	10	300	300	—	0.04	10	
	—	0,15	15	20	20	600	600	—	0.04	20	
	—	0,20	20	100	100	3000	3000	—	0.08	100	
Output Low (Sink) Current, I_{OL} Min.	0.4	0,5	5	0.64	0.61	0.42	0.36	0.51	1	—	mA
	0.5	0,10	10	1.6	1.5	1.1	0.9	1.3	2.6	—	
	1.5	0,15	15	4.2	4	2.8	2.4	3.4	6.8	—	
Output High (Source) Current, I_{OH} Min.	4.6	0,5	5	-0.64	-0.61	-0.42	-0.36	-0.51	-1	—	
	2.5	0,5	5	-2	-1.8	-1.3	-1.15	-1.6	-3.2	—	
	9.5	0,10	10	-1.6	-1.5	-1.1	-0.9	-1.3	-2.6	—	
	13.5	0,15	15	-4.2	-4	-2.8	-2.4	-3.4	-6.8	—	
Output Voltage: Low-Level, V_{OL} Max.	—	0,5	5	0.05				—	0	0.05	V
	—	0,10	10	0.05				—	0	0.05	
	—	0,15	15	0.05				—	0	0.05	
Output Voltage: High-Level, V_{OH} Min.	—	0,5	5	4.95				4.95	5	—	
	—	0,10	10	9.95				9.95	10	—	
	—	0,15	15	14.95				14.95	15	—	
Input Low Voltage, V_{IL} Max.	0.5,4.5	—	5	1.5				—	—	1.5	V
	1,9	—	10	3				—	—	3	
	1.5,13.5	—	15	4				—	—	4	
Input High Voltage, V_{IH} Min.	0.5,4.5	—	5	3.5				3.5	—	—	
	1,9	—	10	7				7	—	—	
	1.5,13.5	—	15	11				11	—	—	
Input Current, I_{IN} Max.	—	0,18	18	±0.1	±0.1	±1	±1	—	$\pm 10^{-5}$	±0.1	μA

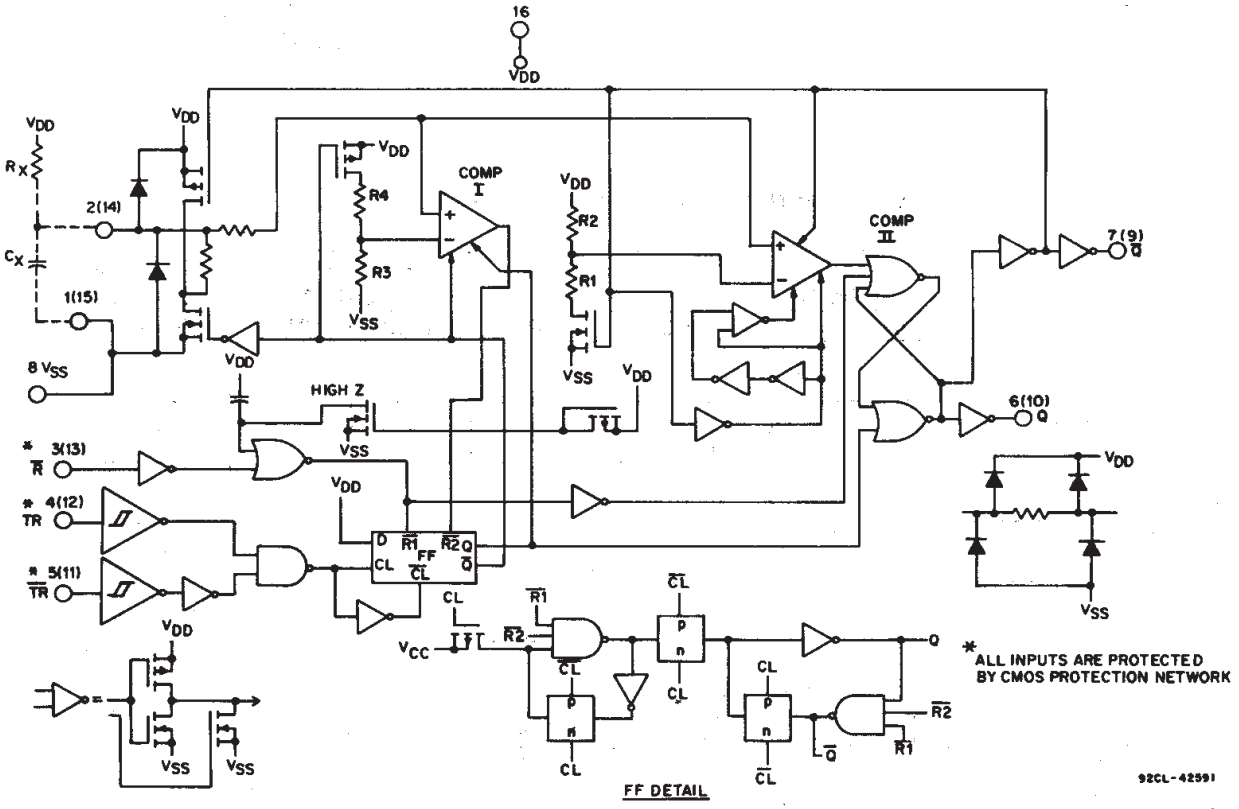

Fig. 1 - Logic diagram (½ of device shown).

DYNAMIC ELECTRICAL CHARACTERISTICS, At T_A=25° C; Input t_r,t_f=20 ns, C_L=50 pF

CHARACTERISTIC		TEST CONDITIONS V_{DD} (V)	LIMITS Min.	Typ.	Max.	UNITS
Transition Time	t_{TLH}, t_{THL}	5	—	100	200	ns
		10	—	50	100	
		15	—	40	80	
Propagation Delay Time: +TR or -TR to Q or $\overline{Q}$	t_{PLH}, t_{PHL}	5	—	300	600	
		10	—	150	300	
		15	—	100	220	
Reset to Q or $\overline{Q}$		5	—	250	500	
		10	—	125	250	
		15	—	95	190	
Minimum Input Pulse Width: +TR, -TR or Reset	t_{WH}, t_{WL}	5	—	80	140	
		10	—	40	80	
		15	—	30	60	
Output Pulse Width - Q or $\overline{Q}$: C_X = 0.002 μF, R_X = 100 KΩ	T	5	198	210	230	μs
		10	200	212	232	
		15	202	214	234	
C_X=0.1 μF, R_X=100 KΩ		5	9.4	9.97	10.5	ms
		10	9.4	9.95	10.6	
		15	9.5	10	10.6	
C_X=10 μF, R_X=100 KΩ		5	0.95	1	1.06	s
		10	0.95	1	1.06	
		15	0.96	1.01	1.07	
Pulse Width Match between circuits in same package: C_X=0.1 μF, R_X=100 KΩ	$\frac{100\,(T_1-T_2)}{T_1}$	5	—	±1	—	%
		10	—	±1	—	
		15	—	±1	—	
Minimum Retrigger Time	t_{rr}	5	0	—	—	ns
		10	0	—	—	
		15	0	—	—	
Input Capacitance	C_{IN}	Any Input	—	5	7.5	pF

*Note: Minimum R_X value=4 KΩ, minimum C_X value=5000 pF.

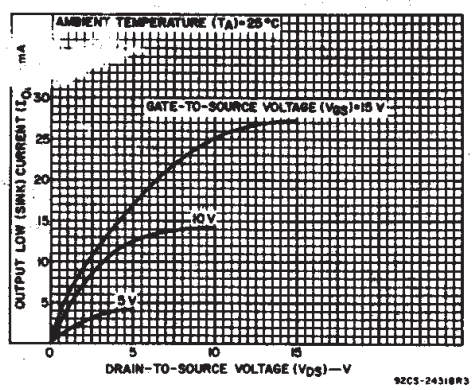

Fig. 2 - Typical output low (sink) current characteristics.

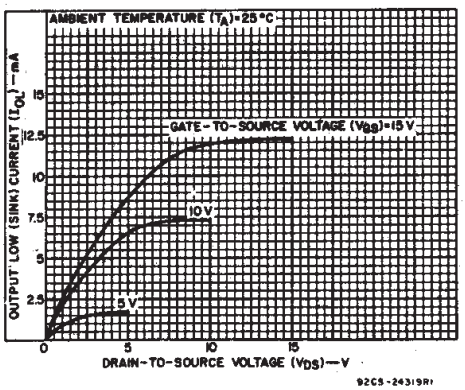

Fig. 3 - Minimum output low (sink) current characteristics.

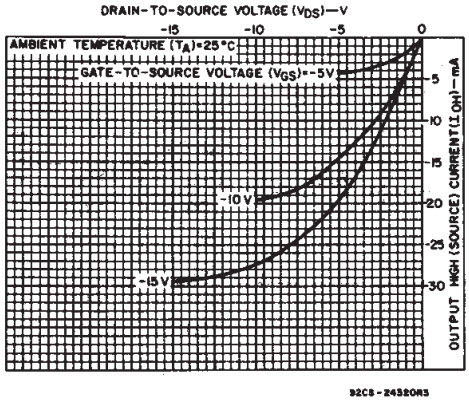

Fig. 4 - Typical output high (source) current characteristics.

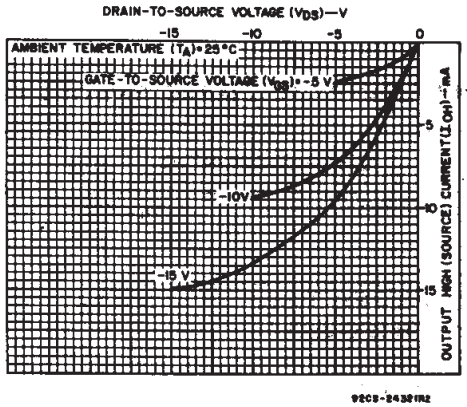

Fig. 5 - Minimum output high (source) current characteristics.

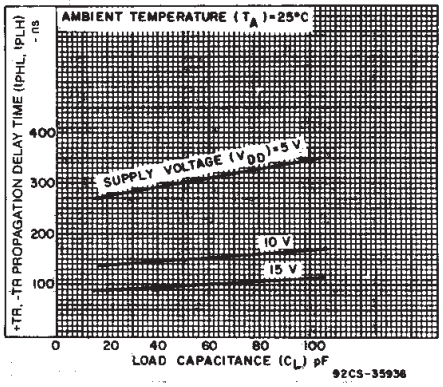

Fig. 6 - Typical propagation delay time as a function of load capacitance (+TR or −TR to Q or $\overline{Q}$).

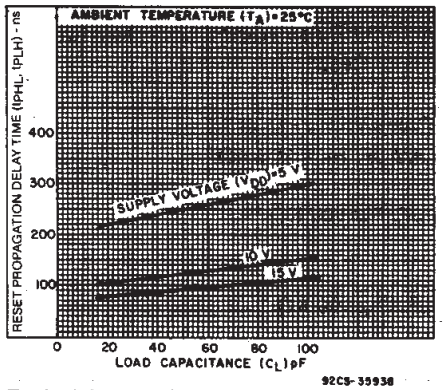

Fig. 7 - Typical propagation delay time as a function of load capacitance (RESET to Q or $\overline{Q}$).

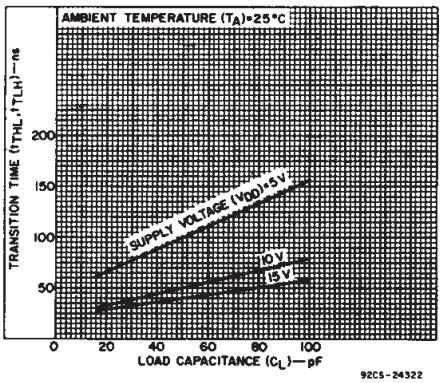

Fig. 8 - Typical transition time as a function of load capacitance.

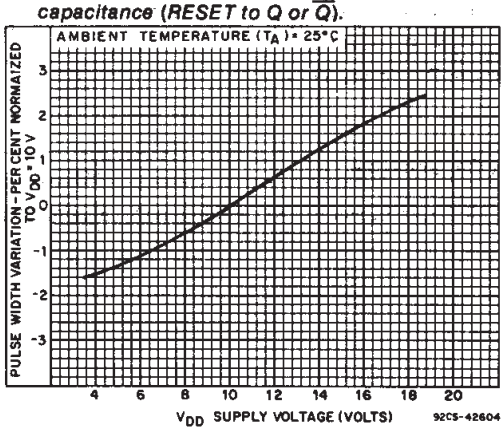

Fig. 9 - Typical pulse-width variation as a function of supply voltage.

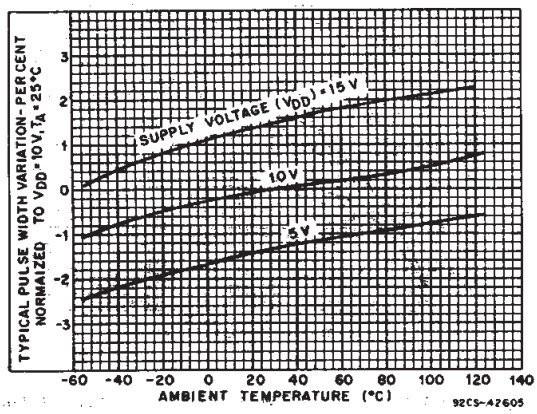

Fig. 10 - Typical pulse-width variation as a function of temperature (R_X=100 KΩ, C_X=0.1 μF).

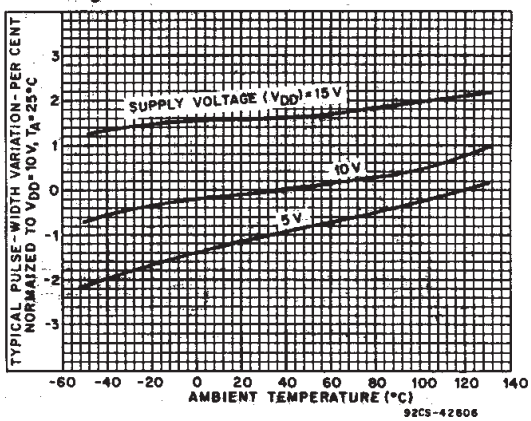

Fig. 11 - Typical pulse-width variation as a function of temperature (R_X=100 KΩ, C_X=2000 pF).

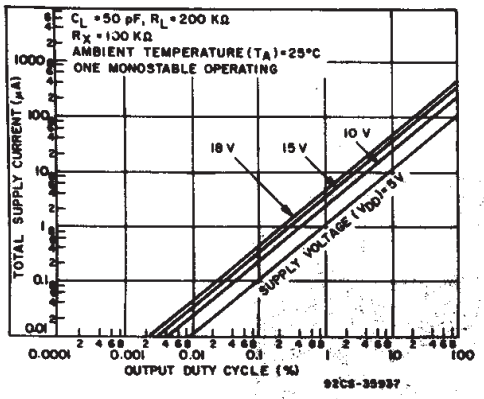

Fig. 12 - Typical total supply current as a function of output duty cycle.

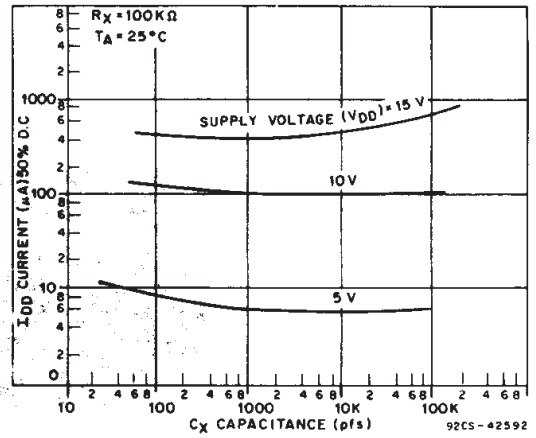

Fig. 13 - Typical total supply current as a function of load capacitance.

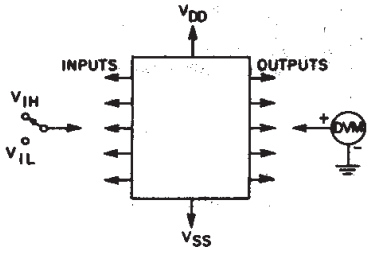

NOTE:
1. Test any combination of inputs.
2. When measuring V_{IH} or V_{IL} for Schmitt trigger inputs (+TR, -TR), the input must first be brought to V_{DD} or V_{SS}, respectively, then reduced to the specified limit.

Fig. 14 - Input voltage test circuit.

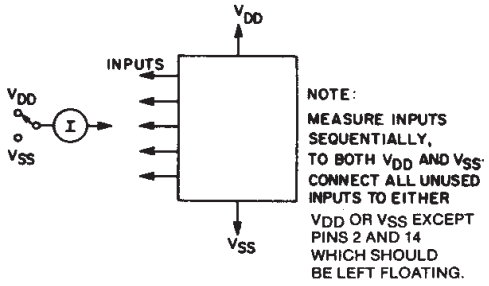

Fig. 15 - Input leakage-current test circuit.

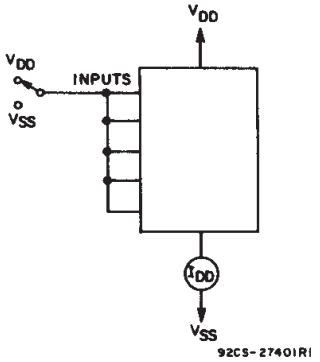

Fig. 16 - Quiescent device current test circuit.

Power-Down Mode

During a rapid power-down condition, as would occur with a power-supply short circuit or with a poorly filtered power supply, the energy stored in C_X could discharge into Pin 2 or 14. To avoid possible device damage in this mode, when C_X is ≥ 0.5 microfarad, a protection diode with a 1-ampere or higher rating (1N5395 or equivalent) and a separate ground return for C_X should be provided as shown in Fig. 17.

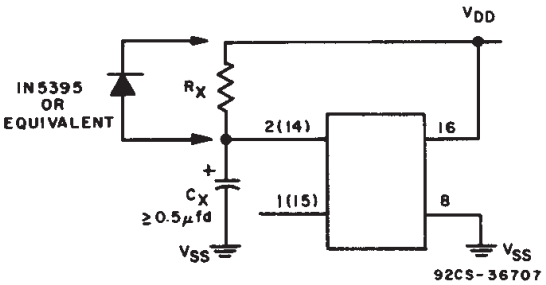

Fig. 17 - Rapid power-down protection circuit.

An alternate protection method is shown in Fig. 18, where a 51-ohm current-limiting resistor is inserted in series with C_X. Note that a small pulse width decrease will occur however, and R_X must be appropriately increased to obtain the originally desired pulse width.

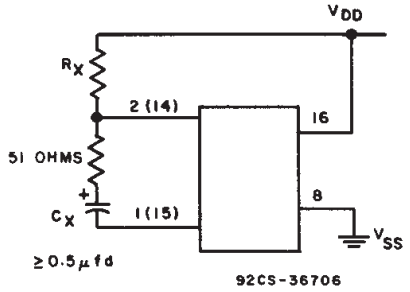

Fig. 18 - Alternate rapid power-down protection circuit.

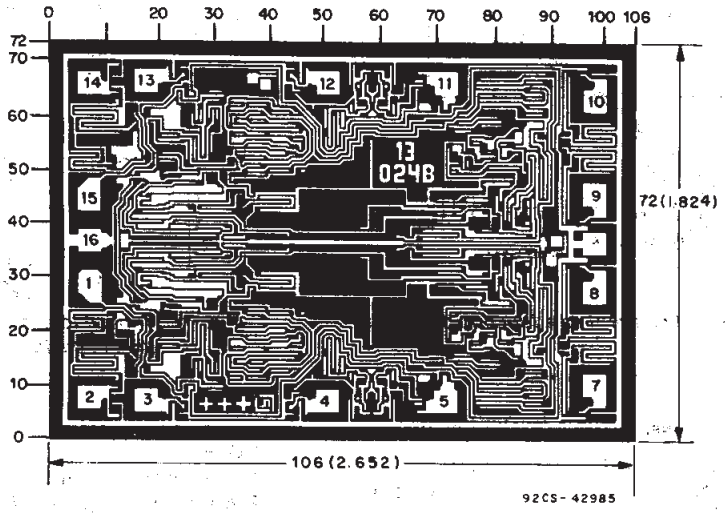

Dimensions in parentheses are in millimeters and are derived from the basic inch dimensions as indicated. Grid graduations are in mils (10^{-3} inch).

Dimensions and pad layout for CD14538BH.

PACKAGING INFORMATION

Orderable Device	Status (1)	Package Type	Package Drawing	Pins	Package Qty	Eco Plan (2)	Lead/Ball Finish (6)	MSL Peak Temp (3)	Op Temp (°C)	Device Marking (4/5)	Samples
5962-9055701EA	ACTIVE	CDIP	J	16	1	TBD	A42	N / A for Pkg Type	-55 to 125	5962-9055701EA CD14538BF3A	Samples
CD14538BE	ACTIVE	PDIP	N	16	25	Green (RoHS & no Sb/Br)	CU NIPDAU	N / A for Pkg Type	-55 to 125	CD14538BE	Samples
CD14538BF	ACTIVE	CDIP	J	16	1	TBD	A42	N / A for Pkg Type	-55 to 125	CD14538BF	Samples
CD14538BF3A	ACTIVE	CDIP	J	16	1	TBD	A42	N / A for Pkg Type	-55 to 125	5962-9055701EA CD14538BF3A	Samples
CD14538BM	ACTIVE	SOIC	D	16	40	Green (RoHS & no Sb/Br)	CU NIPDAU	Level-1-260C-UNLIM	-55 to 125	CD14538BM	Samples
CD14538BM96	ACTIVE	SOIC	D	16	2500	Green (RoHS & no Sb/Br)	CU NIPDAU	Level-1-260C-UNLIM	-55 to 125	CD14538BM	Samples
CD14538BMT	ACTIVE	SOIC	D	16	250	Green (RoHS & no Sb/Br)	CU NIPDAU	Level-1-260C-UNLIM	-55 to 125	CD14538BM	Samples
CD14538BNSR	ACTIVE	SO	NS	16	2000	Green (RoHS & no Sb/Br)	CU NIPDAU	Level-1-260C-UNLIM	-55 to 125	CD14538B	Samples
CD14538BPW	ACTIVE	TSSOP	PW	16	90	Green (RoHS & no Sb/Br)	CU NIPDAU	Level-1-260C-UNLIM	-55 to 125	CM538B	Samples
CD14538BPWG4	ACTIVE	TSSOP	PW	16	90	Green (RoHS & no Sb/Br)	CU NIPDAU	Level-1-260C-UNLIM	-55 to 125	CM538B	Samples
CD14538BPWR	ACTIVE	TSSOP	PW	16	2000	Green (RoHS & no Sb/Br)	CU NIPDAU	Level-1-260C-UNLIM	-55 to 125	CM538B	Samples
CD14538BPWRG4	ACTIVE	TSSOP	PW	16	2000	Green (RoHS & no Sb/Br)	CU NIPDAU	Level-1-260C-UNLIM	-55 to 125	CM538B	Samples

(1) The marketing status values are defined as follows:
ACTIVE: Product device recommended for new designs.
LIFEBUY: TI has announced that the device will be discontinued, and a lifetime-buy period is in effect.
NRND: Not recommended for new designs. Device is in production to support existing customers, but TI does not recommend using this part in a new design.
PREVIEW: Device has been announced but is not in production. Samples may or may not be available.
OBSOLETE: TI has discontinued the production of the device.

(2) **RoHS:** TI defines "RoHS" to mean semiconductor products that are compliant with the current EU RoHS requirements for all 10 RoHS substances, including the requirement that RoHS substance do not exceed 0.1% by weight in homogeneous materials. Where designed to be soldered at high temperatures, "RoHS" products are suitable for use in specified lead-free processes. TI may reference these types of products as "Pb-Free".
RoHS Exempt: TI defines "RoHS Exempt" to mean products that contain lead but are compliant with EU RoHS pursuant to a specific EU RoHS exemption.

Green: TI defines "Green" to mean the content of Chlorine (Cl) and Bromine (Br) based flame retardants meet JS709B low halogen requirements of <=1000ppm threshold. Antimony trioxide based flame retardants must also meet the <=1000ppm threshold requirement.

(3) MSL, Peak Temp. - The Moisture Sensitivity Level rating according to the JEDEC industry standard classifications, and peak solder temperature.

(4) There may be additional marking, which relates to the logo, the lot trace code information, or the environmental category on the device.

(5) Multiple Device Markings will be inside parentheses. Only one Device Marking contained in parentheses and separated by a "~" will appear on a device. If a line is indented then it is a continuation of the previous line and the two combined represent the entire Device Marking for that device.

(6) Lead/Ball Finish - Orderable Devices may have multiple material finish options. Finish options are separated by a vertical ruled line. Lead/Ball Finish values may wrap to two lines if the finish value exceeds the maximum column width.

Important Information and Disclaimer: The information provided on this page represents TI's knowledge and belief as of the date that it is provided. TI bases its knowledge and belief on information provided by third parties, and makes no representation or warranty as to the accuracy of such information. Efforts are underway to better integrate information from third parties. TI has taken and continues to take reasonable steps to provide representative and accurate information but may not have conducted destructive testing or chemical analysis on incoming materials and chemicals. TI and TI suppliers consider certain information to be proprietary, and thus CAS numbers and other limited information may not be available for release.

In no event shall TI's liability arising out of such information exceed the total purchase price of the TI part(s) at issue in this document sold by TI to Customer on an annual basis.

TAPE AND REEL INFORMATION

REEL DIMENSIONS

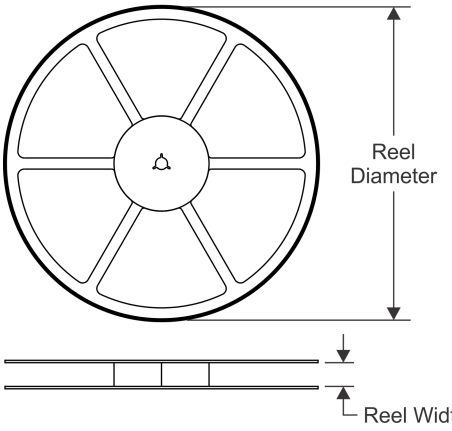

TAPE DIMENSIONS

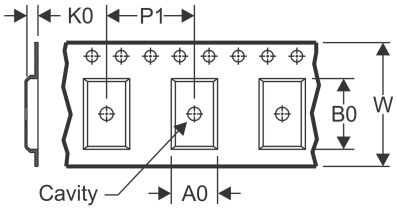

A0	Dimension designed to accommodate the component width
B0	Dimension designed to accommodate the component length
K0	Dimension designed to accommodate the component thickness
W	Overall width of the carrier tape
P1	Pitch between successive cavity centers

QUADRANT ASSIGNMENTS FOR PIN 1 ORIENTATION IN TAPE

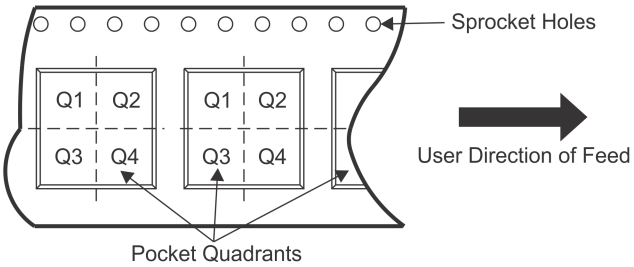

*All dimensions are nominal

Device	Package Type	Package Drawing	Pins	SPQ	Reel Diameter (mm)	Reel Width W1 (mm)	A0 (mm)	B0 (mm)	K0 (mm)	P1 (mm)	W (mm)	Pin1 Quadrant
CD14538BM96	SOIC	D	16	2500	330.0	16.4	6.5	10.3	2.1	8.0	16.0	Q1
CD14538BPWR	TSSOP	PW	16	2000	330.0	12.4	6.9	5.6	1.6	8.0	12.0	Q1

TAPE AND REEL BOX DIMENSIONS

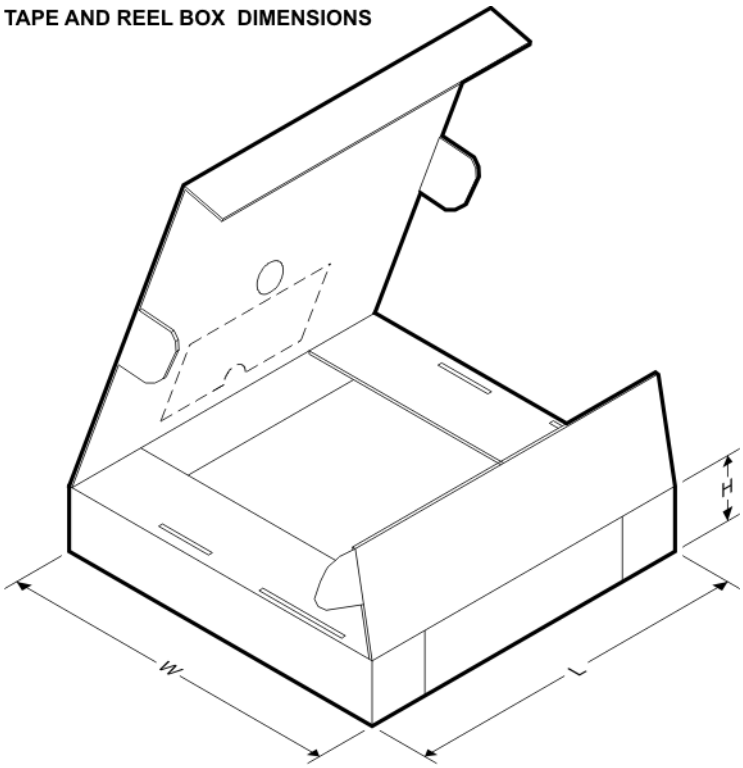

*All dimensions are nominal

Device	Package Type	Package Drawing	Pins	SPQ	Length (mm)	Width (mm)	Height (mm)
CD14538BM96	SOIC	D	16	2500	333.2	345.9	28.6
CD14538BPWR	TSSOP	PW	16	2000	367.0	367.0	35.0

J (R–GDIP–T**) CERAMIC DUAL IN–LINE PACKAGE

14 LEADS SHOWN

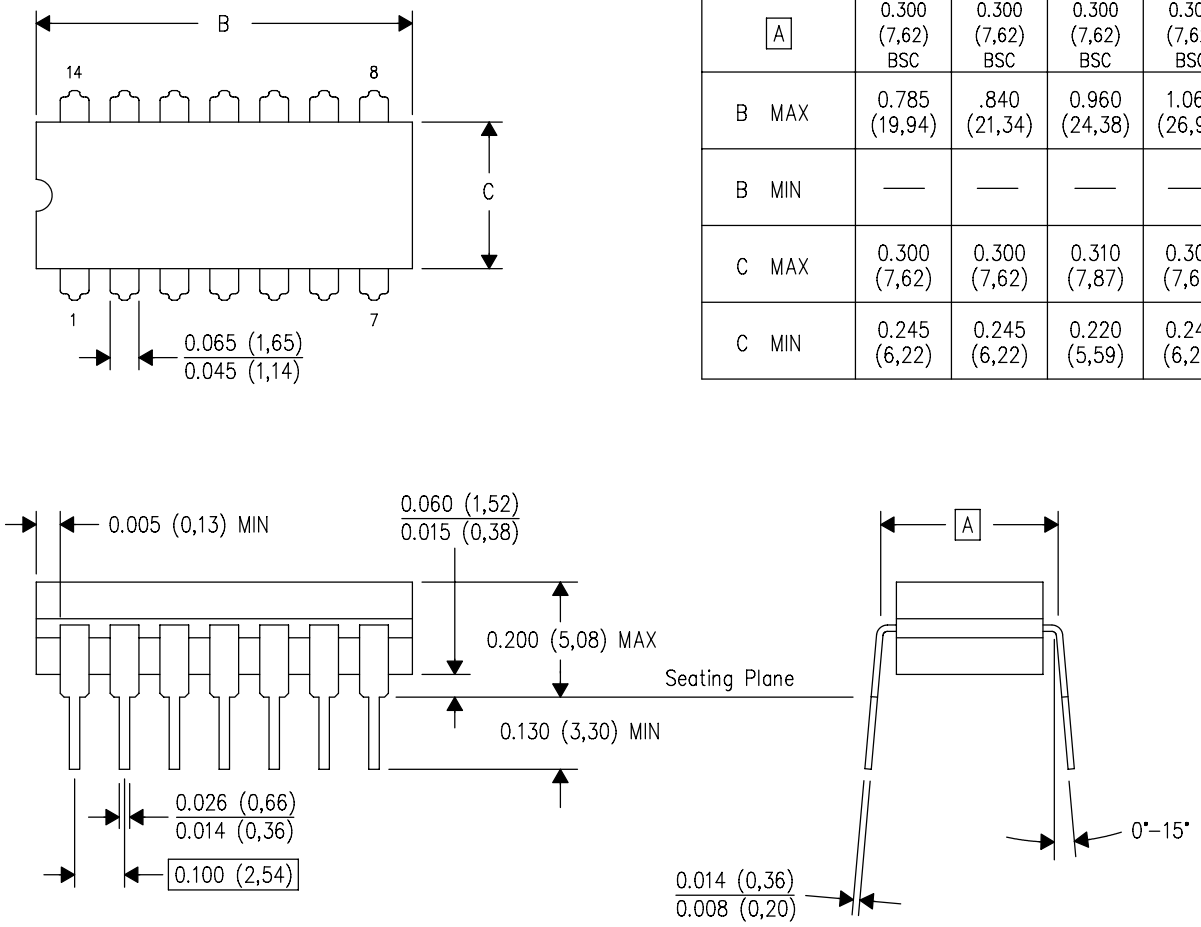

DIM \ PINS **	14	16	18	20
A	0.300 (7,62) BSC	0.300 (7,62) BSC	0.300 (7,62) BSC	0.300 (7,62) BSC
B MAX	0.785 (19,94)	.840 (21,34)	0.960 (24,38)	1.060 (26,92)
B MIN	—	—	—	—
C MAX	0.300 (7,62)	0.300 (7,62)	0.310 (7,87)	0.300 (7,62)
C MIN	0.245 (6,22)	0.245 (6,22)	0.220 (5,59)	0.245 (6,22)

4040083/F 03/03

NOTES:
- A. All linear dimensions are in inches (millimeters).
- B. This drawing is subject to change without notice.
- C. This package is hermetically sealed with a ceramic lid using glass frit.
- D. Index point is provided on cap for terminal identification only on press ceramic glass frit seal only.
- E. Falls within MIL STD 1835 GDIP1–T14, GDIP1–T16, GDIP1–T18 and GDIP1–T20.

N (R–PDIP–T**) PLASTIC DUAL–IN–LINE PACKAGE

16 PINS SHOWN

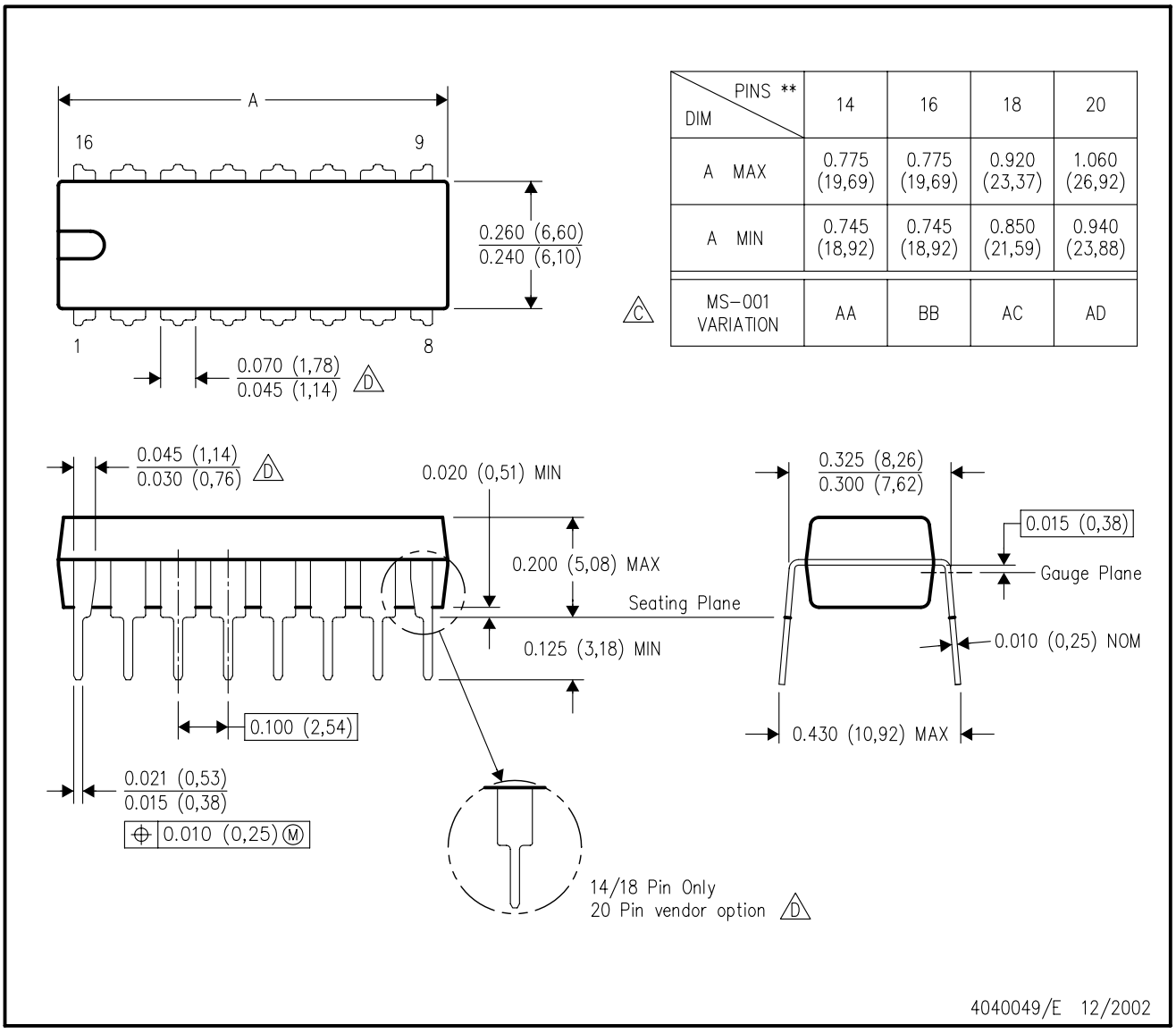

DIM \ PINS **	14	16	18	20
A MAX	0.775 (19,69)	0.775 (19,69)	0.920 (23,37)	1.060 (26,92)
A MIN	0.745 (18,92)	0.745 (18,92)	0.850 (21,59)	0.940 (23,88)
MS–001 VARIATION (C)	AA	BB	AC	AD

NOTES:
A. All linear dimensions are in inches (millimeters).
B. This drawing is subject to change without notice.
C. Falls within JEDEC MS–001, except 18 and 20 pin minimum body length (Dim A).
D. The 20 pin end lead shoulder width is a vendor option, either half or full width.

D (R–PDSO–G16) PLASTIC SMALL OUTLINE

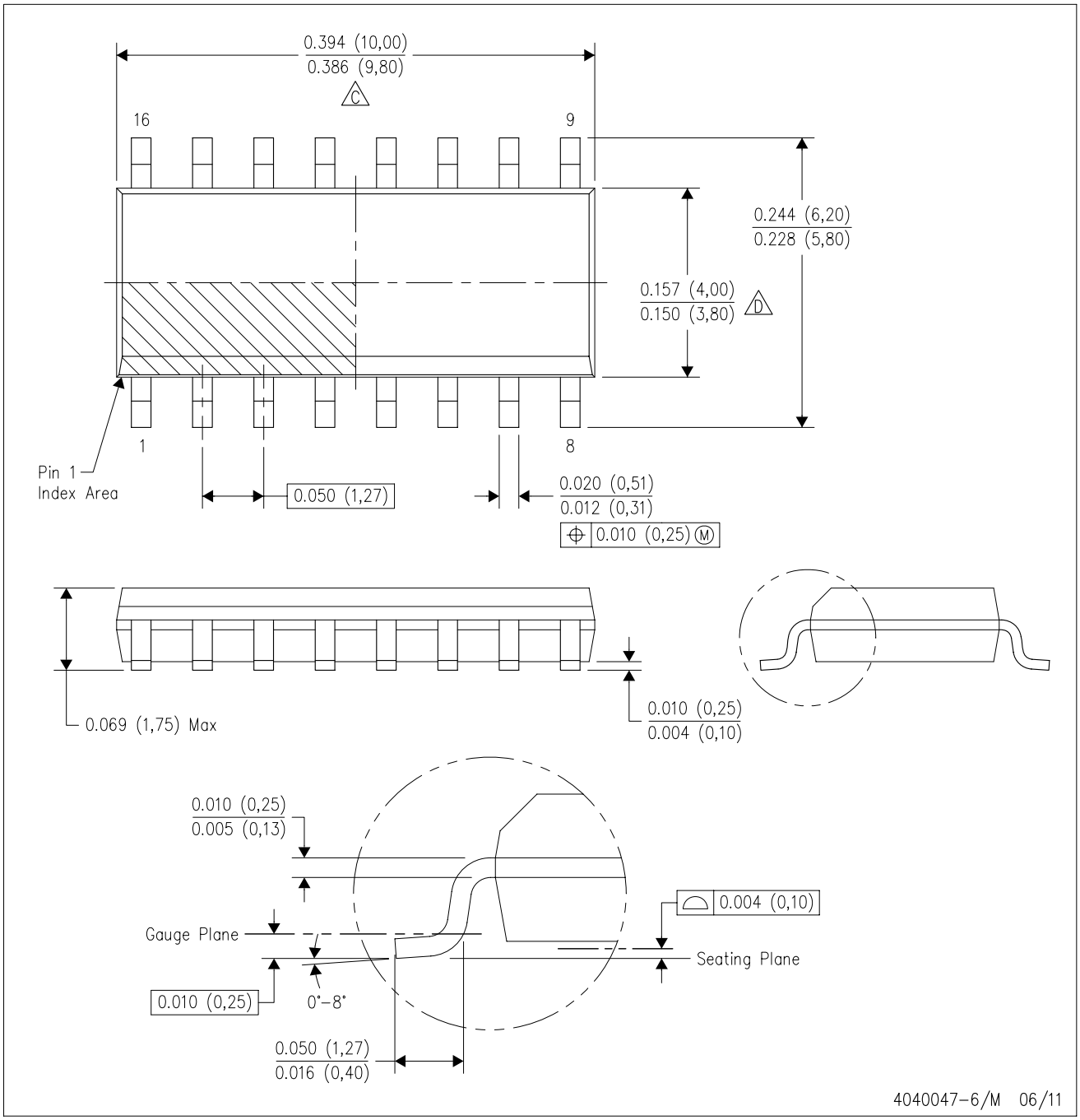

NOTES:
A. All linear dimensions are in inches (millimeters).
B. This drawing is subject to change without notice.
C. Body length does not include mold flash, protrusions, or gate burrs. Mold flash, protrusions, or gate burrs shall not exceed 0.006 (0,15) each side.
D. Body width does not include interlead flash. Interlead flash shall not exceed 0.017 (0,43) each side.
E. Reference JEDEC MS–012 variation AC.

D (R–PDSO–G16) PLASTIC SMALL OUTLINE

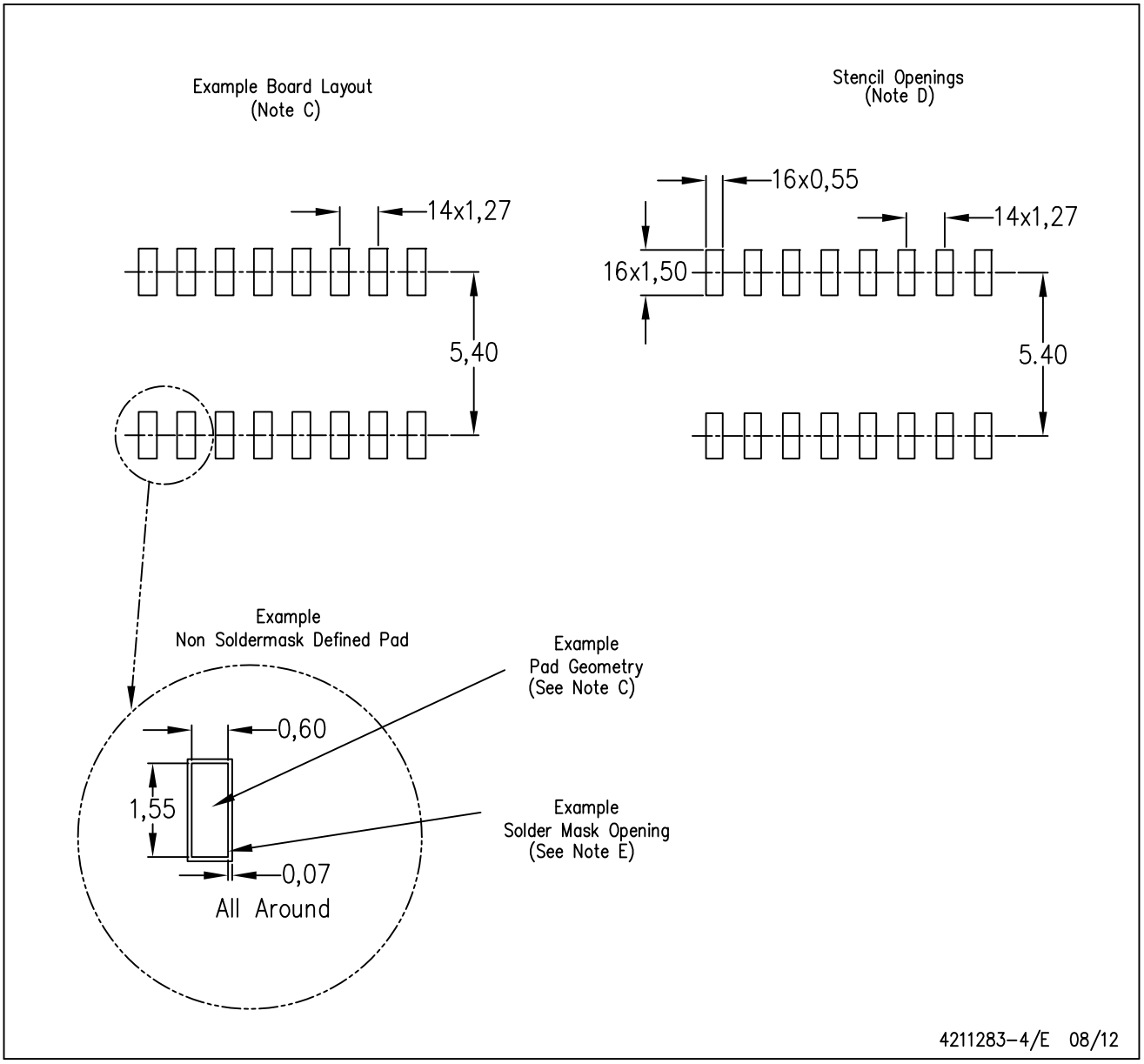

NOTES:
A. All linear dimensions are in millimeters.
B. This drawing is subject to change without notice.
C. Publication IPC–7351 is recommended for alternate designs.
D. Laser cutting apertures with trapezoidal walls and also rounding corners will offer better paste release. Customers should contact their board assembly site for stencil design recommendations. Refer to IPC–7525 for other stencil recommendations.
E. Customers should contact their board fabrication site for solder mask tolerances between and around signal pads.

PW0016A

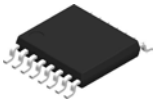

PACKAGE OUTLINE

TSSOP - 1.2 mm max height

SMALL OUTLINE PACKAGE

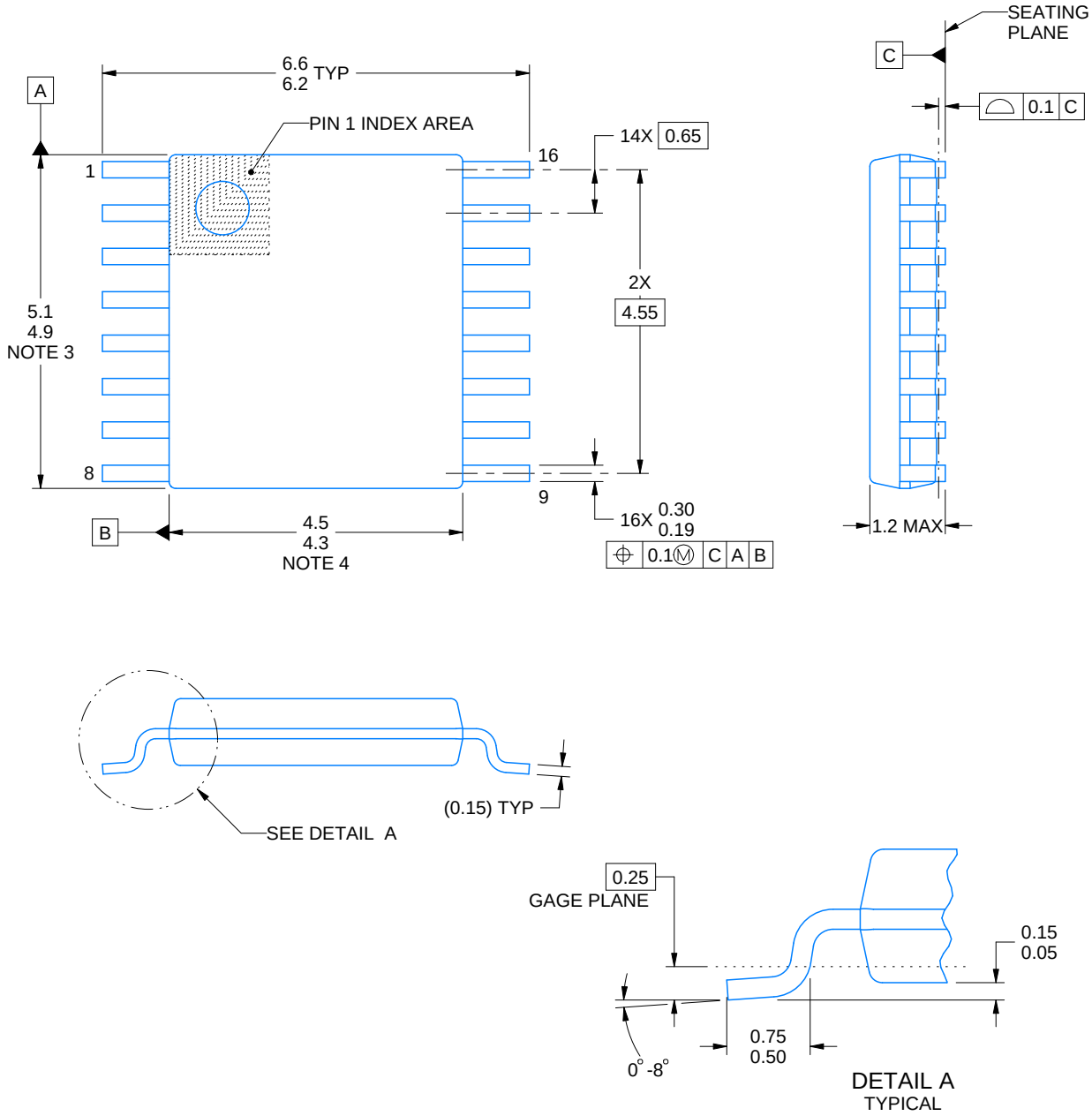

NOTES:

1. All linear dimensions are in millimeters. Any dimensions in parenthesis are for reference only. Dimensioning and tolerancing per ASME Y14.5M.
2. This drawing is subject to change without notice.
3. This dimension does not include mold flash, protrusions, or gate burrs. Mold flash, protrusions, or gate burrs shall not exceed 0.15 mm per side.
4. This dimension does not include interlead flash. Interlead flash shall not exceed 0.25 mm per side.
5. Reference JEDEC registration MO-153.

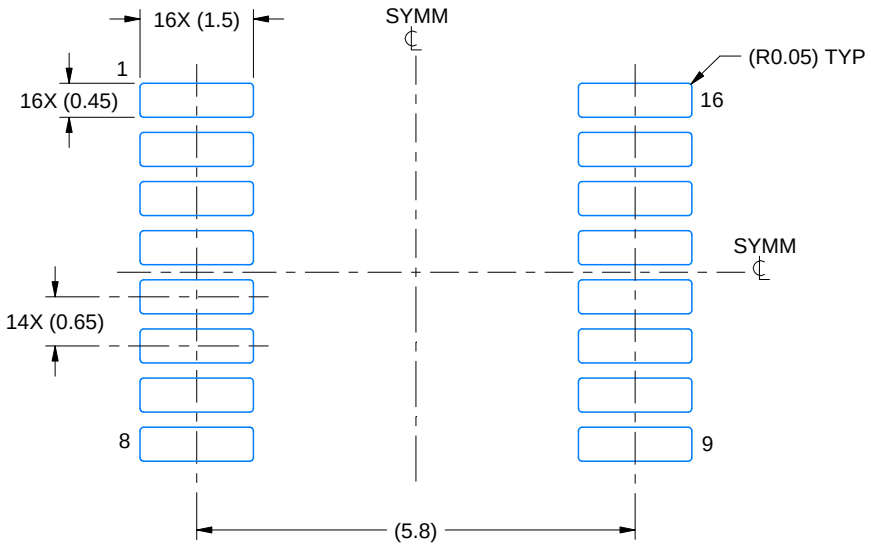

LAND PATTERN EXAMPLE
EXPOSED METAL SHOWN
SCALE: 10X

NON-SOLDER MASK DEFINED (PREFERRED)

SOLDER MASK DEFINED

SOLDER MASK DETAILS

4220204/A 02/2017

NOTES: (continued)

6. Publication IPC-7351 may have alternate designs.
7. Solder mask tolerances between and around signal pads can vary based on board fabrication site.

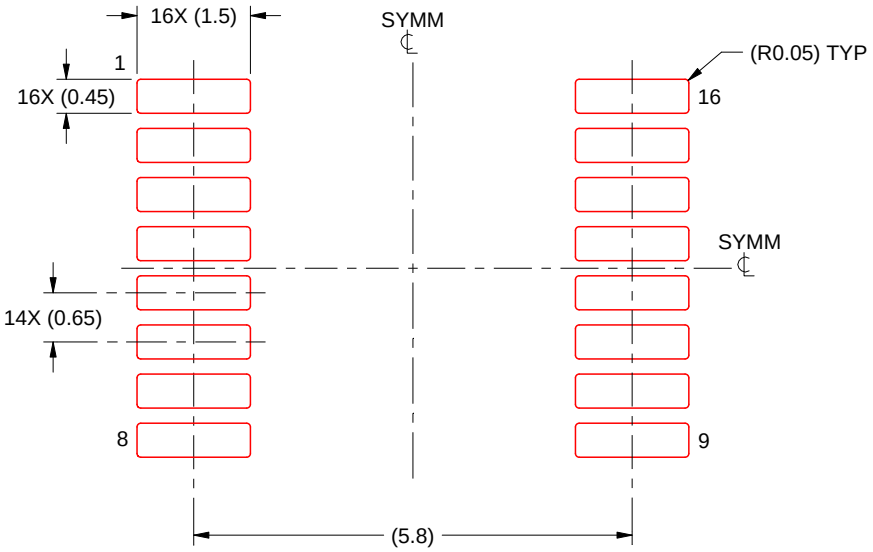

SOLDER PASTE EXAMPLE
BASED ON 0.125 mm THICK STENCIL
SCALE: 10X

4220204/A 02/2017

NOTES: (continued)

8. Laser cutting apertures with trapezoidal walls and rounded corners may offer better paste release. IPC-7525 may have alternate design recommendations.
9. Board assembly site may have different recommendations for stencil design.

MECHANICAL DATA

NS (R-PDSO-G)** **PLASTIC SMALL-OUTLINE PACKAGE**

14-PINS SHOWN

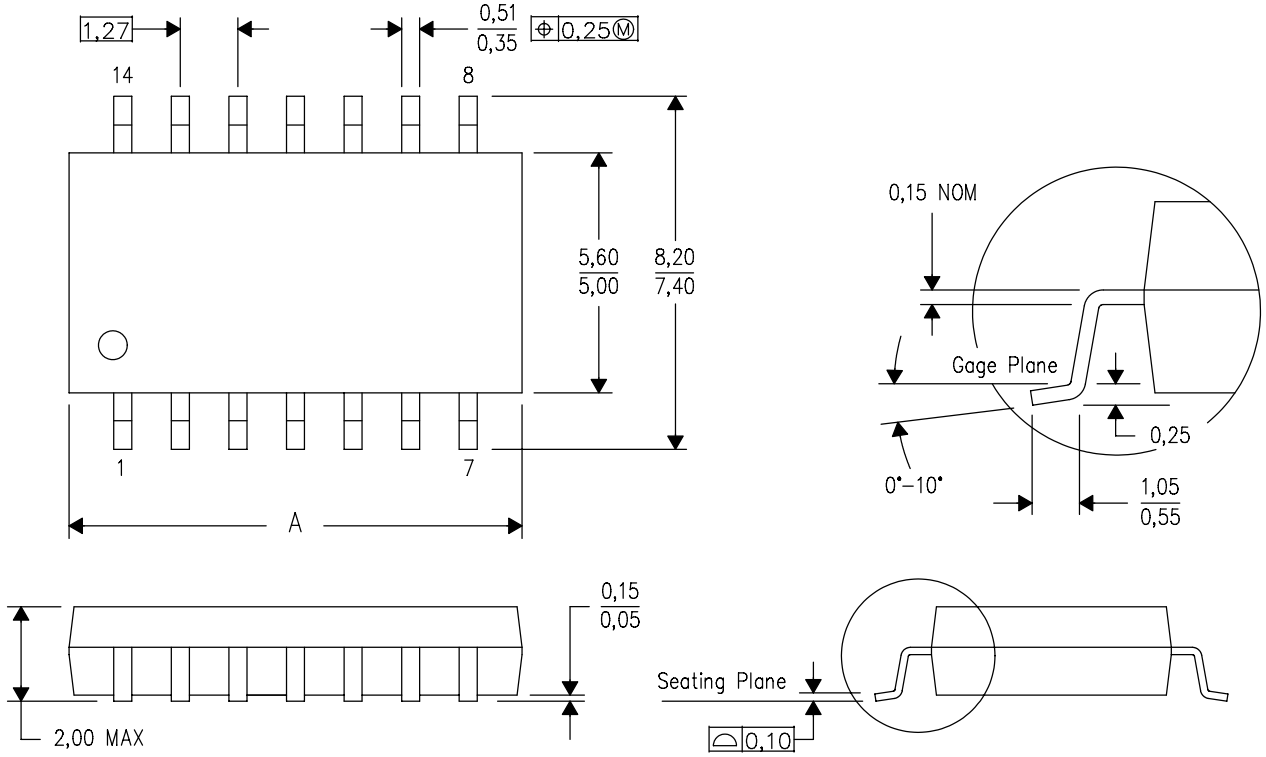

DIM \ PINS **	14	16	20	24
A MAX	10,50	10,50	12,90	15,30
A MIN	9,90	9,90	12,30	14,70

4040062/C 03/03

NOTES:
A. All linear dimensions are in millimeters.
B. This drawing is subject to change without notice.
C. Body dimensions do not include mold flash or protrusion, not to exceed 0,15.

IMPORTANT NOTICE AND DISCLAIMER

TI PROVIDES TECHNICAL AND RELIABILITY DATA (INCLUDING DATASHEETS), DESIGN RESOURCES (INCLUDING REFERENCE DESIGNS), APPLICATION OR OTHER DESIGN ADVICE, WEB TOOLS, SAFETY INFORMATION, AND OTHER RESOURCES “AS IS” AND WITH ALL FAULTS, AND DISCLAIMS ALL WARRANTIES, EXPRESS AND IMPLIED, INCLUDING WITHOUT LIMITATION ANY IMPLIED WARRANTIES OF MERCHANTABILITY, FITNESS FOR A PARTICULAR PURPOSE OR NON-INFRINGEMENT OF THIRD PARTY INTELLECTUAL PROPERTY RIGHTS.

These resources are intended for skilled developers designing with TI products. You are solely responsible for (1) selecting the appropriate TI products for your application, (2) designing, validating and testing your application, and (3) ensuring your application meets applicable standards, and any other safety, security, or other requirements. These resources are subject to change without notice. TI grants you permission to use these resources only for development of an application that uses the TI products described in the resource. Other reproduction and display of these resources is prohibited. No license is granted to any other TI intellectual property right or to any third party intellectual property right. TI disclaims responsibility for, and you will fully indemnify TI and its representatives against, any claims, damages, costs, losses, and liabilities arising out of your use of these resources.

TI’s products are provided subject to TI’s Terms of Sale (www.ti.com/legal/termsofsale.html) or other applicable terms available either on ti.com or provided in conjunction with such TI products. TI’s provision of these resources does not expand or otherwise alter TI’s applicable warranties or warranty disclaimers for TI products.

Mailing Address: Texas Instruments, Post Office Box 655303, Dallas, Texas 75265
Copyright © 2018, Texas Instruments Incorporated