SHOULDER

规格书编号

SPEC NO :

产品规格书
SPECIFICATION

CUSTOMER 客 户：

PRODUCT 产 品：CRYSTAL RESONATOR

MODEL NO 型 号：49S-SMD-7.3728-20-30

PREPARED 编 制：LEO CHECKED 审 核：YORK

APPROVED 批 准：LIUMING D A T E 日 期：2018-7-4

客户确认 CUSTOMER RECEIVED:		
审核 CHECKED	批准 APPROVED	日期 DATE

无锡市好达电子有限公司

Shoulder Electronics Limited

更改历史记录
History Record

更改日期 Date	规格书编号 Spec No	产品型号 Part No	客户产品型号 Customer No	更改内容描述 Modify Content	备注 Remark

1. GENERAL SPECIFICATIONS:

FREQUENCY RANGE	7.3728MHz
LOAD CAPACITANCE	20PF
FREQUENCY TOLERANCE AT 25℃+/-2℃	–/+30PPM
FREQUENCY STABILITY AT –20 TO +70℃	–/+30PPM
OPERATING TEMPERATURE RANGE	–20 TO +70℃
OSCILLATING MODE/CUTTING	Fundamental
STORAGE TEMPERATURE RANGE	–40 TO +85℃
EQUIVALENT SERIES RESISTANCE (ESR)	80ΩMAX
DRIVE LEVEL	100μW
SHUNT CAPACITANCE	7PF MAX
AGING	–/+5PPM PER YEAR
INSULATION RESISTANCE	500 MOhm MIN

2. DIMENSIONS

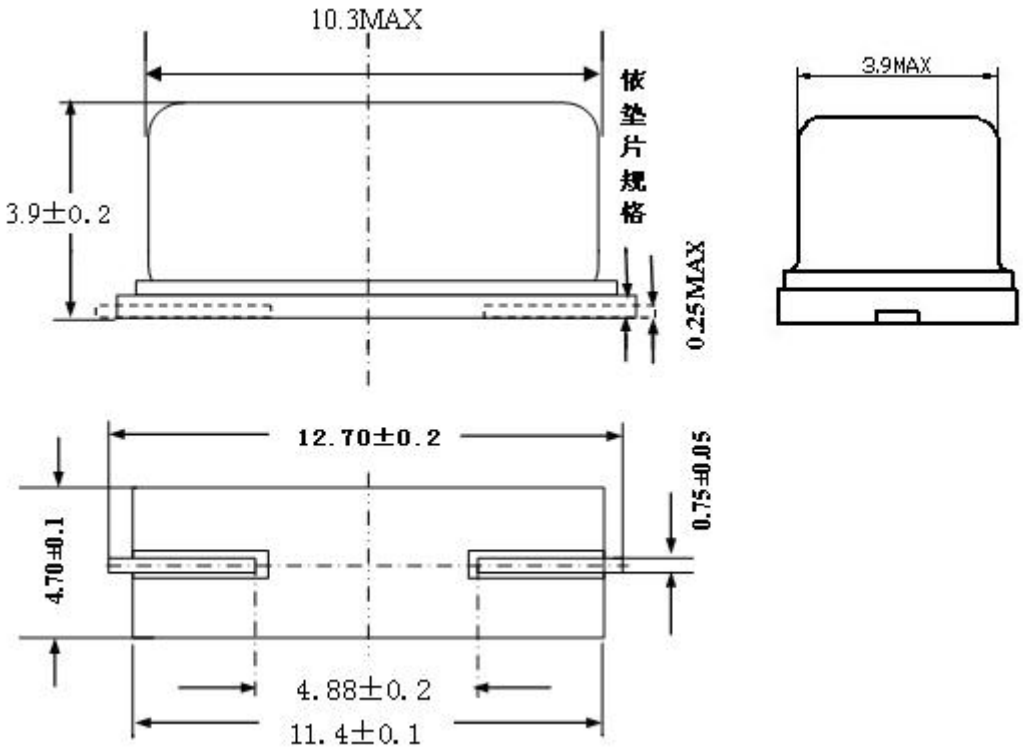

3. MECHANICAL SPECIFICATION

Reliability specification（信赖性测试）

1. Mechanical endurance 机械性能

A.SHOCK TEST 抗冲击能力测试

Electrical requirement and specification of ITEM 3.A and 3.C shall be satisfied after dropping three times from the height of 75 cm onto hard woden board of thickness more than 30 mm.

75 cm高度自然落在30 mm厚硬木板上3次后，电气特性检查满足第3条的A项及C项规格。

B.VIBRATION TEST 抗振动性能测试

Electrical reuirement and specification of ITEM 3.A and 3.C shall be satisfied ater supplying following vibration.

按照以下条件振动后，电气特性检查满足第3条的A项及C项规格。

（1） VIBRATION FREQUENCY 振动频率 10~55Hz

（2） CYCLE 周 期 1 to 2 min.

（3） FULL CYCLE 振 幅 1.5 mm P-P.

（4） DIRECTION 振动方向 X.Y.Z

（5） TIME 振动时间 2H/EACH DIRECTION

C.STRENGTH OF TERMINALS /LEAD-WIRES 引脚强度

PULLING 拉力测试

（1）Body of specimen shall be fixed. And 8.28N of tension weight shall be supplied gradually to axial direction of terminals/lead-wires fos 30s.

（2） After above test 1), there is no observation of any visual damages on the specimen.

将产品的两引脚分别固定8.82牛的重物，沿引脚方向缓缓垂直向上拉，重物离开地面30 s 完成实验后观察产品外观是否有损坏现象。

D.SEALING TIGHTNESS 气密性

There is no observation of gas bubble after specimen put into hot water at 90℃~95℃ for 5 min;

将产品浸入90℃~95℃的热水中5分钟，观察产品无汽泡产生；

E.SOLDERING DIP 沾锡性

Terminals/lead-wires of specimen shall be dipped into Pb Free solder melted

tank at 230℃±3℃ for 3s. dipping depth shall be 0.6mm from the bottom of specimens body.(After applying ROSIN flux) soldering portion shall be covered in over 95 of terminals/lead-wires dipped.

将产品两引脚浸入230℃±3℃锡炉内3s,引脚上端约0.6mm在锡面上面，引脚沾锡面积达90%以上；

F.SOLDER HEATING 耐焊温性

（1）Electrical requirement and specification of ITEM 3.B and 3.D shall be satisfied after the test,after dipping in solder mdlted in tank as follows:

.Dipping Time: 10s ,2 times

.Soldering Temperature:260±10℃

.Dipping Depth:0.6 mm from the edge of terminals

将产品两引脚浸入260℃±3℃锡炉内10s,2次,引脚上端约0.6mm在锡面上面，电气特性检查满足第3条的B项及D项规格.

（2）The specimen shall be passed through the reflow furnace with the condition shown in the Fig-1 profile for 5 times max.

.2 Times : Specification of ITEM 3.A and 3.D shall be satisfied after the test.

.5 Times : Deviation of frequency tolerance shall be ±20PPM max.and 3.D shal be satisfied after the test.

参照图-1 规格对产品过回流焊，最多可过5次；过2次回流焊后电气特性检查满足第3条的A项及D项规格；过5次回流焊后频率变化在±20PPM以内，等效阻抗变化满足第3条D项规格。

FIG-1
图 1

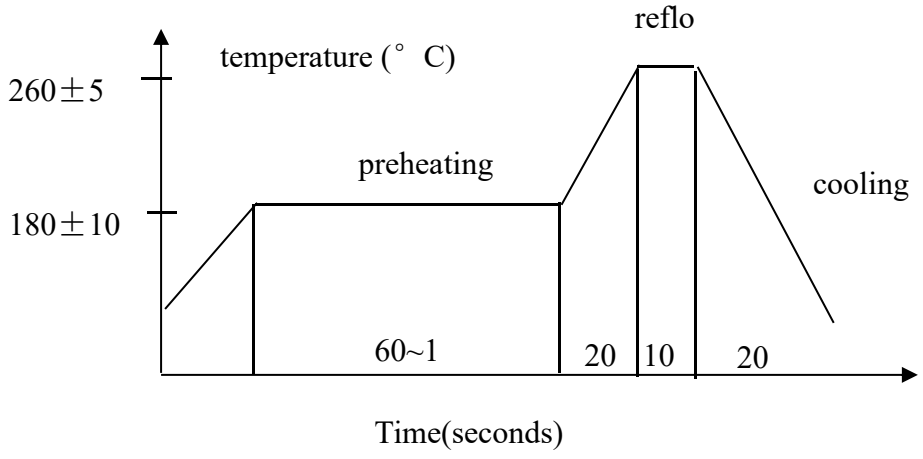

2. ENVIRONMENTAL ENDURANCE 耐环境能力

A. HUMIDITY 耐湿性

Electrical requirement and specification of ITEM 3.B and 3.C shall be satisfied after letting it alone at60℃±2℃ in humidity of 90~95% for 1000h.

将产品放置在温度60℃±2℃、相对湿度90~95%环境下1000H后，电气特性满足每3条的B项各C项；

B. LOW TEMPERATURE STOUAGE 低温保存

Electrical requirement and specification of ITEM 3.B and 3.D shall be satisfied after letting it alone at-20℃±2℃ for 1000h.

将产品放置在温度-20℃±2℃环境下保存1000H后，电气特性满足每3条的B项各C项；

C. HIGH TEMPERATURE STORAGE 高温保存

Electrical requirement and specification of ITEM 3.B and 3.D shall be satisfied after letting it alone at 85℃±2℃ for 1000h.

将产品放置在温度85℃±2℃环境下保存1000H后，电气特性满足每3条的B项各C项；

D. THERMAL SHOCK 冷热冲击

Electrical requirement and specification of ITEM 3.B and 3.D shall be satisfied after supplying the following thermal shock 25 cycles. (Refer to Fig-2)

参照图2规格，对产品进25个环特循的冷热冲击后，电气特性满足每3条的B项和D项；

FIG-2
图 2

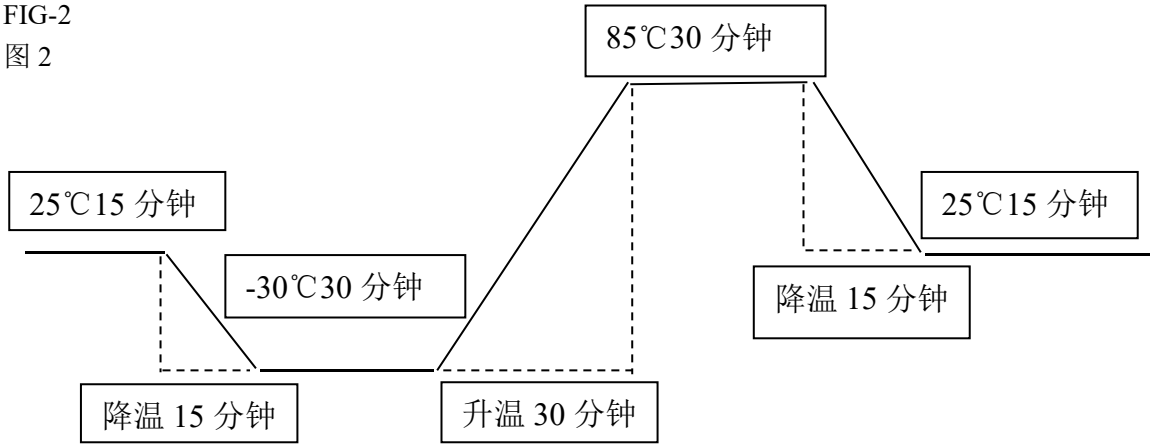

3. SPECIFICATION 判定规格

A. Deviation of frequency tolerance : ±10PPM MAX
频率变化 ±10PPM 以内

B. Deviation of frequency tolerance : ±5PPM MAX
频率变化 ±5PPM 以内

C. Deviation of Equivalent resistance:Either one the bigger ±15% MAX or ±2Ω等效电阻变化 规格的±15%以内或±2Ω

D. Deviation of Equivalent resistance:Either one the bigger ±25% MAX or ±5Ω等效电阻变化 规格的±25%以内或±5Ω

4. PACKAGE

SMD BREDE SPECIFICATIONS （SMD 编带尺寸）

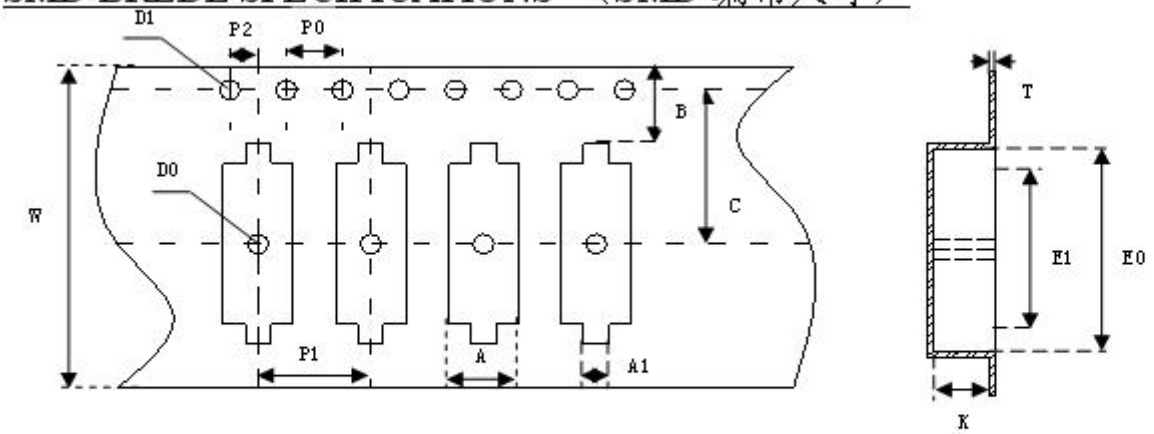

A	A1	B	C	D0	D1	E0	E1	P0	P1	P2	W	T	K
5.0 ± 0.2	1.8± 0.1	5.25 ±0.2	11.5 ± 0.1	1.5± 0.1	1.5± 0.1	15 ± 0.1	12 ± 0.1	4.0± 0.1	8.0± 0.1	2.0 ± 0.1	24 ± 0.5	0.4 ± 0.05	4.35± 0.1

Packing Method（包装样式）

1. Packed 1000 Pcs in 1winding.

   1000PCS一卷。

2. Packed 1 winding in 1 box.

   1卷一盒。

3. Packed 10 box in 1 carton

   10盒一箱

4. There are 10000Pcs in 1 carton

   总计10000PCS装一箱

5. Size of carton: 360mm*360mm*420mm

   外箱尺寸：360mm*360mm*420mm

6. Label mode

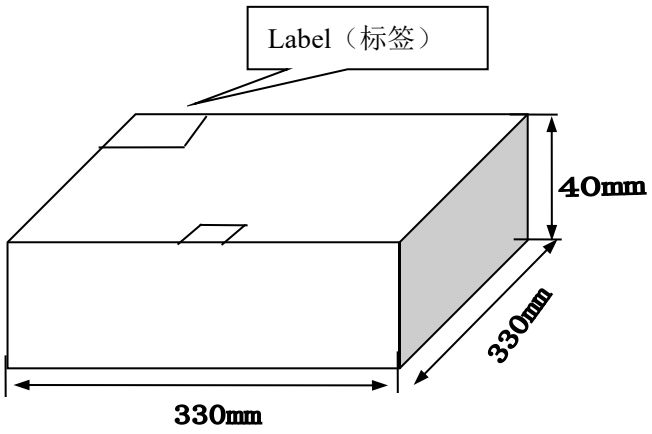
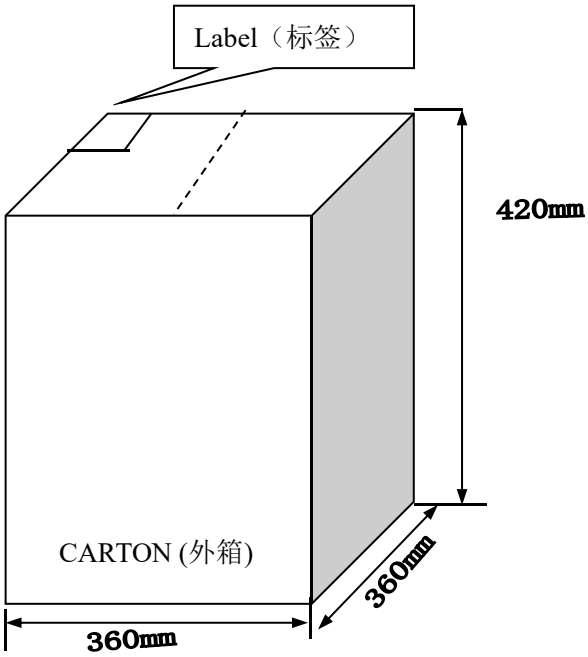
BOX(内盒)